WORKING RADIUS - LIFTING HEIGHT

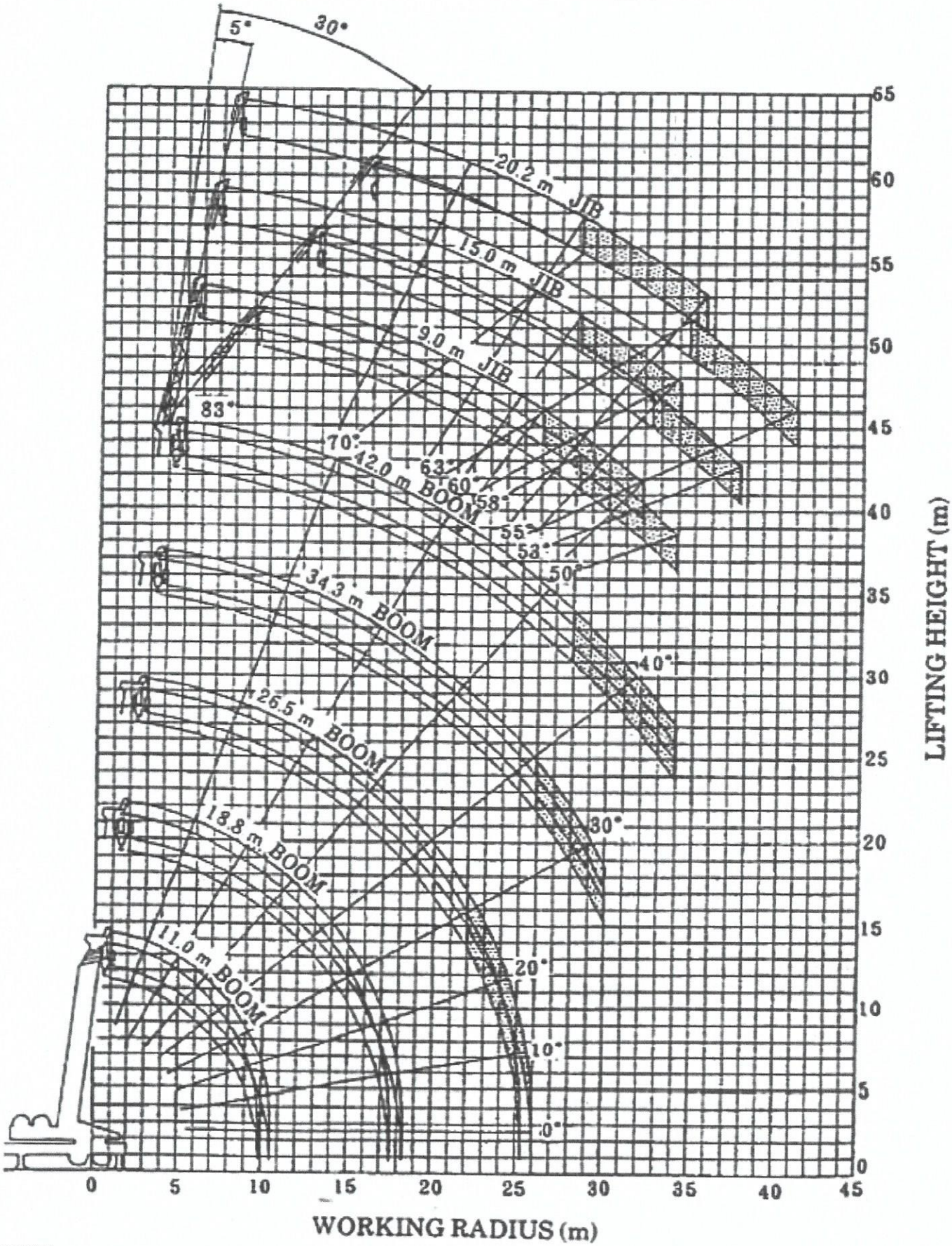

NOTES:

1. The deflection of the boom is not incorporated in the figure above.
2. The above chart is for the case where the outriggers are fully extended and where the front jack are used (over 360°)
3. The [illegible] area in the diagram applies only to the case when the device for heavy-duty work (option) is mounted.

TOTAL RATED LOADS

(1) Standard specifications

(i)

Unit : ton

· Outriggers fully extended + Front jack (360°)
· Outriggers fully extended (Over rear · Over sides)

B (m) \ A	11.0 m	18.8 m	26.5 m	34.3 m	42.0 m
3.0	60.0	35.0			
3.5	60.0	35.0			
4.0	51.8	35.0			
4.5	45.4	35.0			
5.0	40.4	35.0	23.0		
5.5	36.1	32.3	23.0		
6.0	32.6	29.7	23.0		
6.5	29.7	27.5	21.8	15.0	
7.0	26.4	25.2	20.4	15.0	
7.5	23.0	23.0	19.1	15.0	
8.0	20.3	20.3	18.0	15.0	8.0
9.0	16.0	16.0	16.0	13.4	8.0
10.0		12.75	12.75	12.2	8.0
11.0		10.4	10.4	11.0	8.0
12.0		8.55	8.55	9.45	8.0
14.0		6.0	6.0	6.85	7.0
16.0		4.2	4.2	5.1	5.85
18.0			2.75	3.8	4.55
20.0			1.65	2.75	3.55
22.0			0.80	1.85	2.7
24.0				1.2	2.0
26.0				0.60	1.4
28.0					0.90

E (°) \ C / D	9.0 m		15.0 m		20.2 m	
	5°	30°	5°	30°	5°	30°
83	4.5	2.7	2.8	1.3	1.7	0.70
80	4.5	2.7	2.8	1.3	1.7	0.70
78	4.5	2.5	2.8	1.2	1.7	0.70
75	3.7	2.2	2.5	1.1	1.5	0.65
73	3.3	2.0	2.2	1.05	1.38	0.63
70	2.8	1.8	1.85	1.0	1.25	0.62
68	2.5	1.66	1.67	0.92	1.16	0.60
65	2.1	1.5	1.45	0.85	1.05	0.57
63	1.65	1.41	1.05	0.81	0.80	0.55
60	1.0	0.95	0.55	0.48		
58	0.70	0.63				

A = Boom length
B = Working radius
C = Jib length
D = Jib offset
E = Boom angle

NOTES:

1. The total rated loads shown are for the case when the outriggers are set horizontally on firm ground. The values are based on the crane strength.
2. The weights of slings and hooks (600kg for a 60 ton capacity hook, 260kg for a 15 ton capacity hook and 140kg for a 5 ton capacity hook) are included in the total rated loads shown.
3. The total rated load is based on the actual working radius including the deflection of the boom.
4. The number of part lines for each boom length should not exceed the values below. The load per line should not exceed 5t for the main winch and 4.5t for the auxiliary winch.

A	11.0 m	18.3 m	25.5 m	34.3 m	42.0 m	J
H	12	7	5	4	2	1

A = Boom length H = No. of part-line J = Jib / Single top

5. The total rated loads for free-fall operations is 1/5 of the total rated loads given above. The load per line should not exceed 1t for the main winch and 0.9t for the auxiliary winch.
6. The total rated load for the single top is the same as that of the boom and must not exceed 4.5 tons. However, when hooks, slings, etc. are mounted on the boom, one should work with the to rated load obtained by subtracting the weights of the hooks, slings, etc. mounted on the boomtal from the total rated load of the boom.
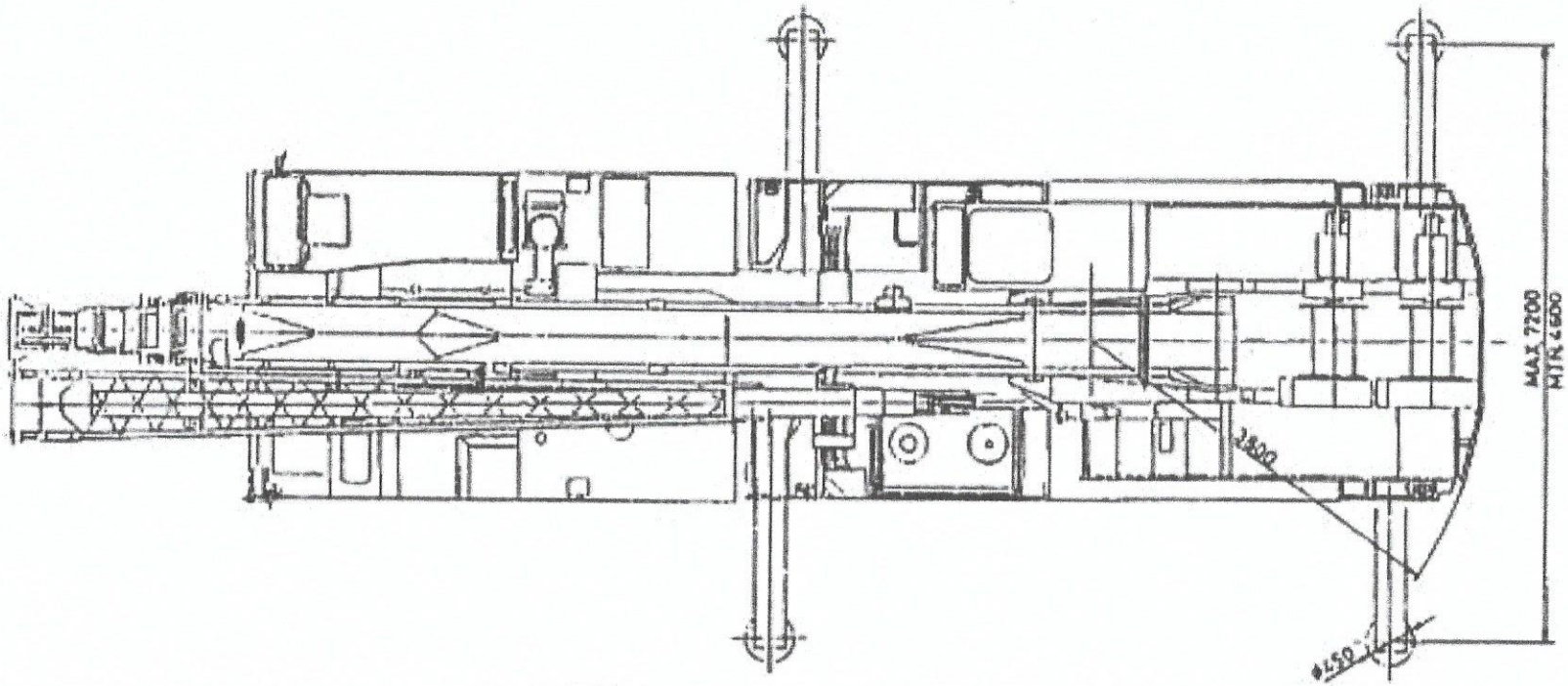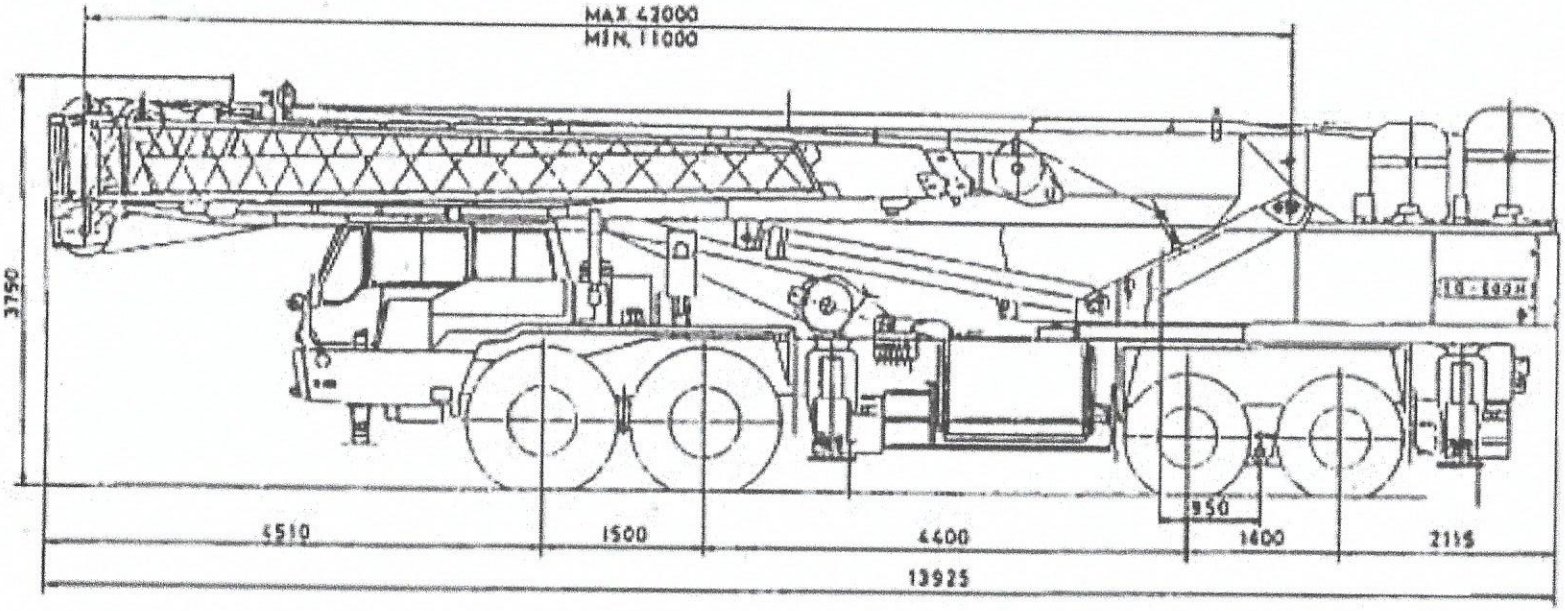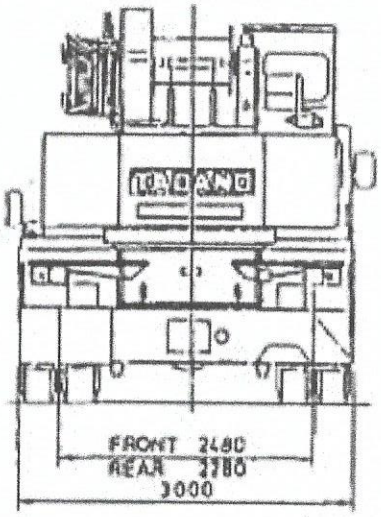
DIMENSIONS (1/100)